Sunhappy
Happy with the sun

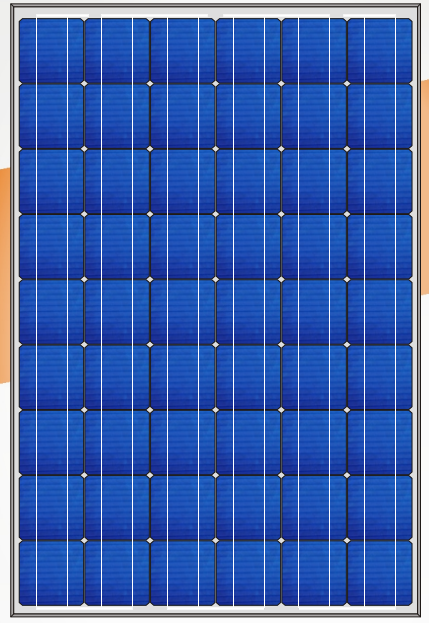

25 YEAR LINEAR PERFORMANCE WARRANTY AND A PRODUCT WORKMANSHIP WARRANTY OF 10 YEARS!

JUNCTION BOX
HUBER + SUHNER

Our Service Guarantee
Replacement for free
48 hours in Germany
5 working days in other european countries

SH6P54/200-230

polycrystalline PV modules 54 cells

- High module conversion efficiency up to 15.62%
- 0 to +3% possitive tolerance for mainstream products
- Performance Warranty
  10 yrs-95% 12yrs-90%
  18 yrs-85% 25yrs-80%
- Entire module certified to withstand high wind loads and snow loads (5400Pa)
- Professional packing solution special for distributors
- European brand junction box plus MC4 connector
- 100% Electro Luminescence test

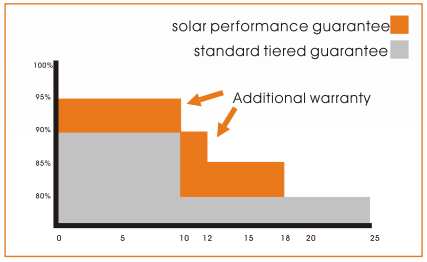

TÜVRheinland CERTIFIED

SH6P54/200-230

Polycrystalline PV modules 54 cells

ELECTRICAL PARAMETERS

Model	SH200	SH205	SH210	SH215	SH220	SH225	SH230
Maximum power(Pmax)	200W	205W	210W	215 W	220W	225W	230W
Open circuit voltage(Voc)	33.40V	33.60V	33.60V	33.70V	34.80 V	35.60V	36.10V
Maximum power point voltage(Vmp)	26.20V	26.40V	26.80V	27.20V	27.30 V	27.50 V	27.80V
Short circuit current(Isc)	8.12A	8.24A	8.33A	8.45A	8.58A	8.63A	8.72A
Maximum power point current(Imp)	7.64A	7.77A	7.84A	7.91A	8.06A	8.19A	8.28A
Module Efficiency	13.59%	13.93%	14.27%	14.60%	14.94%	15.28%	15.62%
Max system Voltage(VDC)	1000V（IEC）/600V（UL）						
Module insulation Resistance(Ω)	≥100MΩ						
Fuse Ratings In Series(A)	10A						
Power Discrepancy	0~3%						
Operating Temperature	-40℃～+85℃						
Temperature Coeffcient of Pmax	-0.48%/℃						
Temperature Coefficient of Voc	-0.34%/℃						
Temperature Coefficient of Isc	+0.05%/℃						
NOCT	25±2℃						
Test Condition	*STC:1000W/m²,25℃ .AM1.5						

MECHANICAL CHARACTERISTICS

Cell Type	ponocrystalline 156x156mm(6 inches)
Cell arrangement	54（6×9）in series connection
Measurement(L×W×H）	1484*992*45mm
Weight(Kg)	17kgs (38 ibs)
Front glass	3.2mm tempered glass
Frame	anodized aluminum alloy
Mechanical load	5400pa
Classification	safty class II ;Application class A ;IP65

PACKING SOLUTION

Container	40' HC
Pieces per pallet	23
Pallets per container	30
Pieces per container:	690
Container	20' GP
pieces per pallet	20
Pallets per container	14
Pieces per container	280

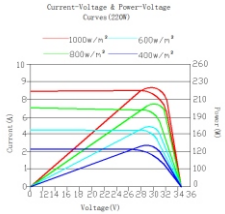
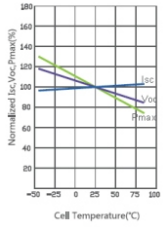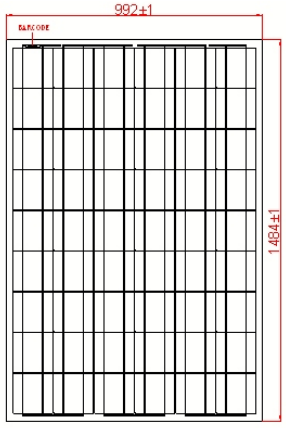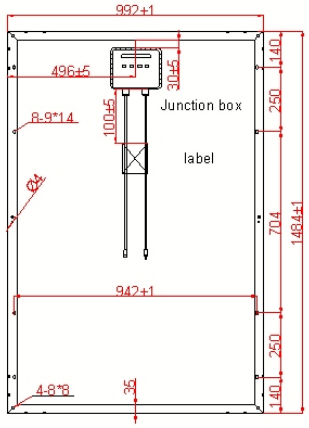
Temperature Dependence of Isc,Voc,Pmax