MSM85-36M MSM90-36M MSM95-36M

Electrical Specifications

*STC : Irradiance 1000W/m^2, AM1.5 spectrum, module temperature 25℃

Model type	MSM85-36M	MSM90-36M	MSM95-36M
Peak power (Pmax)	85W	90W	95W
Cell Efficiency	15.8%	16.8%	17.5%
Maximum power voltage (Vmp)	18V	18.5V	19V
Maximum power current (Imp)	4.72A	4.9A	5.0A
Open circuit voltage (Voc)	21.96	22.57	23.18
Short circuit current (Isc)	5.10A	5.25A	5.40A
Power Tolerance	±3%		
Maximum system voltage	1000VDC		
Series fuse rating (A)	10		
Number of bypass diode	2		

Temperature Coefficients

Current Temperature Coefficient	α(Isc)	0.03%℃
Voltage Temperature Coefficient	β(Voc)	- 0.32%/℃
Power Temperature Coefficient	γ(Pmax)	-0.42%/℃

Mechanical Characteristics

Dimensions：	1200 x 553 x 50mm (47.24x21.77x1.97 inch)
Weight:	7.5 kg (16.53 lbs)
Solar Cells:	36cells in series(4x 9)
Construction:	High-transmission low-iron tempered glass , EVA, TPT
Frame:	Anodized aluminum is mainly for improving corrosion resistance. Color: silver

Module Diagram

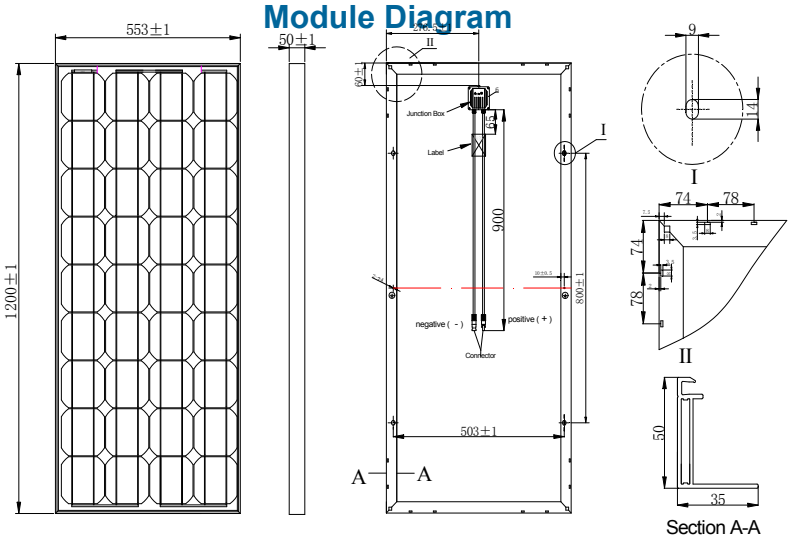

Output(Optional)

Cable	LAPP(4 mm2)
Lengths	900mm(-) and 900(+)
Connector	MC Plug Type IV

Electrical Performance

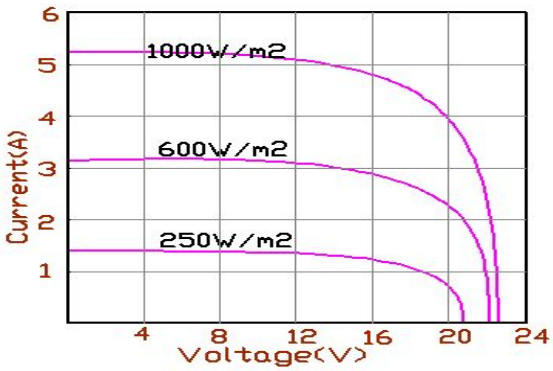

Module Warranty:

25-year limited warranty of 80% power output;

10-year limited warranty of 90% power output;

5-year limited warranty of materials and workmanship.

Note: This publication summarizes product warranty and Specifications which are subject to change without notice