SOLAR MODULES
MD005M(36)

Characteristics

Model	MD005M(36)
Module Efficiency	7.60%
Open circuit voltage(Voc)	21.4V
Optimum operating voltage(Vmp)	17.1V
Short circuit current(Isc)	0.31A
Optimum operating current(Imp)	0.29A
Maximum Power at STC(Pm)	5 Wp

STC: Irradiance 1000W/㎡, Module temperature 25℃,AM=1.5.

Specifications

Cell	Mono-crystalline silicon solar cells 62.5×15.625mm
No. of cells and connections	36(4×9)
Dimension of module (mm)	216×306×18mm
Weight	0.8Kg
Power Tolerance	±5%

Limits

Operating temperature	-40℃～+85℃
Maximum system voltage	(IEC)715 V DC (UL)600VDC
Maximum Series Fuse Rating	1A

Temperature and Coefficients

NOCT	45±2℃
Temp. Coeff.of Isc(TK Isc)	0.05%/℃
Temp. Coeff.of Voc(TK Voc)	-0.33% /℃
Temp. Coeff.of Pmax(TK Pmax)	-0.45%/℃
Maximum wind loads	2400Pa
Maximum snow load	5400Pa
Maximum Hail diameter @ 23m/s	25mm

NOCT: Nominal Operation Cell temperature

Output

Type of output terminal	Junction box
Cable	NanYang(2×0.75mm²)
Asymmetrical lengths	500mm (-), 500mm(+)
Connection	

Packing Quantity

Container	20GP	40HC
Pallets per container	8	18
Pieces per container	4800	11520

Blueprint of the module

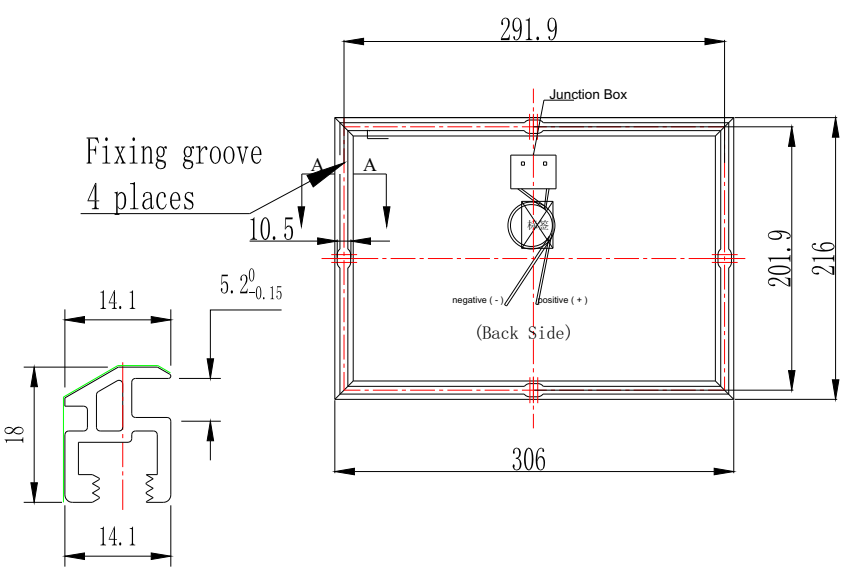

Section A-A

Note:mm(inch)
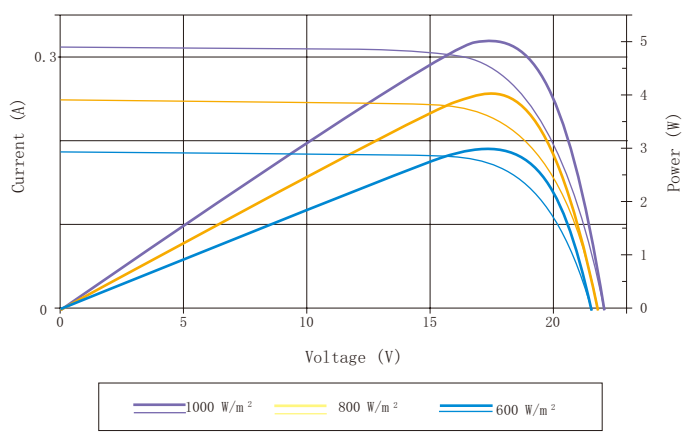
5W PV I-V characteristic curves