DWM B1

320W/325W/330W/335W

IMBRICATE

ALL PRODUCTS QUALIFIED

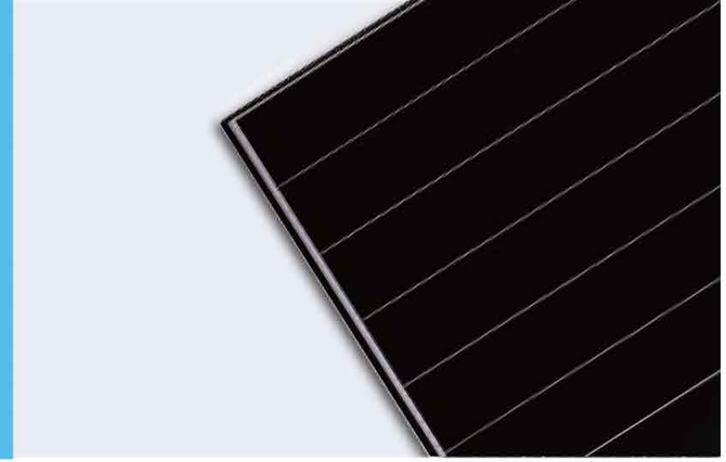

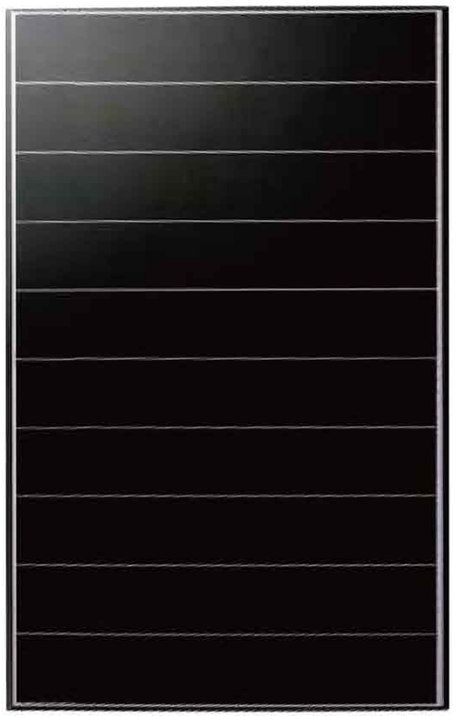

No Gap Between Cells

Cells imbricated technology, maximizing the effective area of solar modules

No Welding Strip

No welding strip connection, lower internal resistance loss

Super strong frame

Glue-spilled tank with double-layer waterproof, cross-section with hook-shaped aluminum frame, enhanced 10% of the mechanical load strength

Reduce Power Loss

Unique circuit design, alleviate the hot-spot problem of solar modules effectively

Imbricate Designed

Imbricate design, higher efficiency and power density

Strong Mechanical Load Lapacity

Passed the 2400pa wind load and 5400pa snow load test, ensuring that the module has a stable mechanical life

Color Classification

Modules are packaged according to color classification, to achieve consistent appearance after installation

LINEAR PERFORMANCE WARRANTY

- 10 Years Manufacturing Warranty
- 12 Years 90% Power Output
- 25 Years 80% Power Output

MECHANICAL DRAWINGS

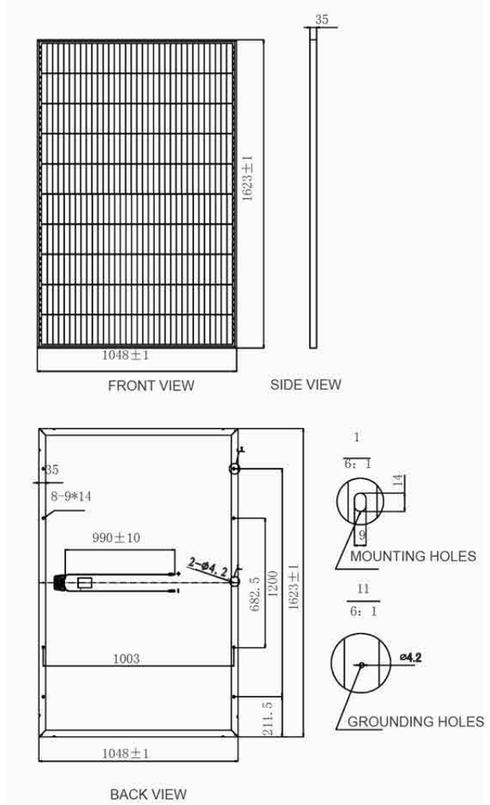

I-V CURVES

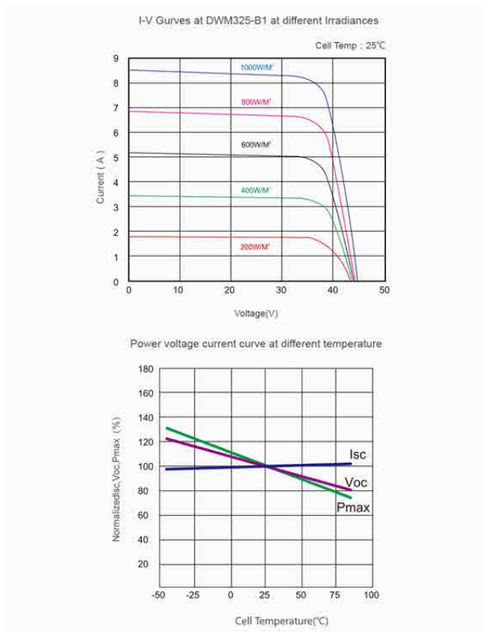

MECHANICAL SPECIFICATION

Cell Type	Mono Crystalline 156.75x31.35mm
Number Of Cells	60（6x10）
Dimensions(AxBxC)	1623x1048x35mm
Weights	19kg
Front Glass	3.2mm Tempered Low Iron Glass
Frame	Clear Anodized Aluminum Alloy
Junction Box	IP67, With Bypass Diodes
Connector	Mc4 Compatible
Output Cables	Tuv,±length 900mm,4.0mm²

ELECTRICAL CHARACTERISTICS

Maximum Power At STC(Pmax)	320W	325W	330W	335W
Short Circuit Current(Isc)	9.13A	9.22A	9.32A	9.40A
Open Circuit Voltage(Voc)	44.9V	45.3V	45.5V	45.8V
Maximum Power Current(Impp)	8.82A	8.90A	8.99A	9.08A
Maximum Power Voltage(Vmpp)	36.3V	36.5V	36.7V	36.9V
Module Efficiency	18.81%	19.11%	19.40%	19.70%
Power Tolerance	0~+3%	0~+3%	0~+3%	0~+3%

STC: 1000W/m2 irradiance, 25°C cell temperature, AM1.5.

NOCT

Maximum Power At STC(Pmax)	238.5	242.2	245.9	249.6
Short Circuit Current(Isc)	7.39	7.46	7.55	7.61
Open Circuit Voltage(Voc)	41.5	41.9	42.1	42.3
Maximum Power Current(Impp)	7.01	7.08	7.15	7.21
Maximum Power Voltage(Vmpp)	34.0	34.2	34.4	34.6

NOCT: Irradiance at 800W/m² , Ambient Temperature 20°C , wind speed 1m/s .

SYSTEM INTEGRATION PARAMETERS

Maximum System Voltage	VDC 1000V
Maximum Series Fuse	15A
Increased Snowload Acc.to Iec 61215	5400Pa
Operating Temperature	-40~+85℃
Number Of Bypass Diodes	2

TEMPERATURE CHARACTERISTICS

Norminal Operating Cell Temperature(Noct)	45℃±2℃
Temperature Coefficient Of Pmax	-0.41%℃
Temperature Coefficient Of Voc	-0.33%℃
Temperature Coefficient Of Lsc	0.06%℃

PACKING CONFIGURATION

Container	20′ HQ	40′ HQ
Pieces Per Pallet	30	30
Pallets Per Container	12	28
Pieces Per Container	400	840