POWER PS SONIC
TRUSTED BATTERY SOLUTIONS

PSL SERIES

Medical | Solar | Wind | Mobility | Data Center | Transport | Sport & Recreation | Utility

PSL-12200 12.8V 23.0 AH

Rechargeable Lithium Iron Phosphate Battery
PSL – LiFePO4 Series

PCM FEATURES

- Balancing function for cells
- Over-current protection
- Over-voltage protection
- Over-discharge protection
- Short-circuit protection

APPROVALS

- U.L recognized
- ISO9001:2015 – Quality management systems
- ETL Approved
- FCC Approved

BATTERY FEATURES

- Compact and only 40% of the weight of comparable lead acid batteries
- Up to 10 times more cycles than lead acid batteries
- Faster charging and lower self-discharge
- Delivers twice the power of lead acid batteries, even high discharge rate, while maintaining high energy capacity
- Super safe chemistry reducing the risk of explosion or combustion due to high impact, over-charging or short circuit situation
- Rugged impact resistant ABS case and cover flame retardant to UL94:V0

TERMINALS: (mm)

M5 threaded insert
(female-threaded)

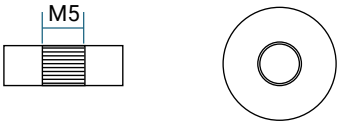

DIMENSIONS: inch (mm)

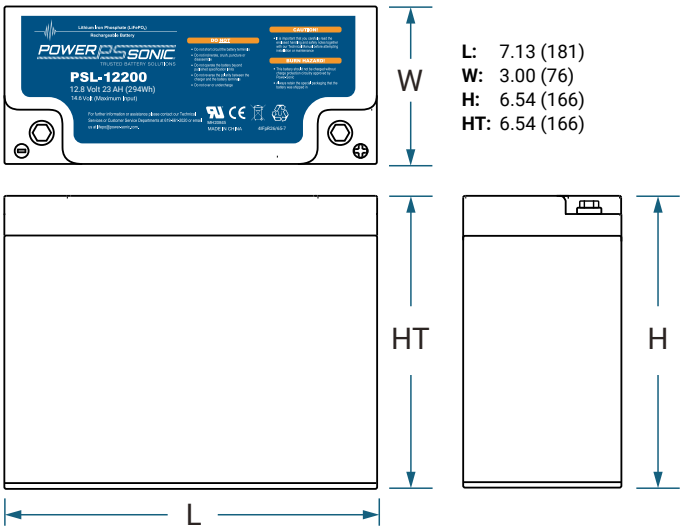

L: 7.13 (181)
W: 3.00 (76)
H: 6.54 (166)
HT: 6.54 (166)

Tolerances are +/- 0.04 in. (+/- 1mm) and +/- 0.08 in. (+/- 2mm) for height dimensions.
All data subject to change without notice.

PERFORMANCE SPECIFICATIONS

Nominal Voltage	12.8 volts
Rated Capacity	23.0 AH
Watt Hour	295
Life Expectation	Residual capacity is approximately 60% of rated capacity after 2500 cycle based on standard charge/discharge
Approximate Weight	6.16 lbs. (2.80 kg)
Cell Configuration	IFR 26650EC - 3.3AH 4SX7P
Internal Resistance at 50% SOC	<45.0 milliohms
Max Continuous Discharge Current at 68°F (20°C)	20A
Protection/Communication	PCM
Shelf Life (% of nominal capacity at 68°F (20°C)	
1 Month	97%
3 Month	91%
6 Month	85%
Operating Temperature Range	
Charge	32°F (0°C) to 122°F (50°C)
Discharge	14°F (-10°C) to 122°F (50°C)
Storage	32°F (0°C) to 86°F (30°C)
Case	Flame Retardant ABS Plastic UL94:V-0
Power Sonic Chargers	Contact us for information on a suitable charger
Standard Charge/Discharge	
Constant Current Charge Voltage	Charge CC@0.2C to 14.6V then CV until current drops to 0.05C; Rest 30 min.
Maximum Charging Current	10A
Charging Time with Max Charging Current	2.5 Hours
Standard Discharge	Discharge @ 0.2C to 10V.
Terminal	M5 threaded insert (female threaded)

CORPORATE HEADQUARTERS
(USA AND INTERNATIONAL EXCLUDING EMEA)
Power-Sonic Corporation
7550 Panasonic Way, San Diego,
California 92154
T: +1 (619) 661 2020
F: +1 (619) 661 3650
E: customer-service@power-sonic.com

POWER-SONIC EUROPE LIMITED
(EMEA – EUROPE, MIDDLE EAST AND AFRICA)
3 Buckingham Square,
Hurricane Way, Wickford,
Essex SS11 8YQ
T: +44 (0)1268 560686
F: +44 (0)1268 560902
E: salesEMEA@power-sonic.com

To ensure safe and efficient operation always refer to the latest edition of our Technical Manual, as published on our website.
© 2018. Power-Sonic Corporation. All rights reserved. All trademarks are the property of their respective owners.
All data subject to change without notice. E&O.E

power-sonic.com

Rev1: 12/18

POWER PS SONIC
TRUSTED BATTERY SOLUTIONS

PSL SERIES

PSL-12200 12.8V 23.0 AH

Rechargeable Lithium Iron Phosphate Battery
PSL – LiFePO4 Series

CHARGING CHARACTERISTICS (0.2C AMP @ 25°C)

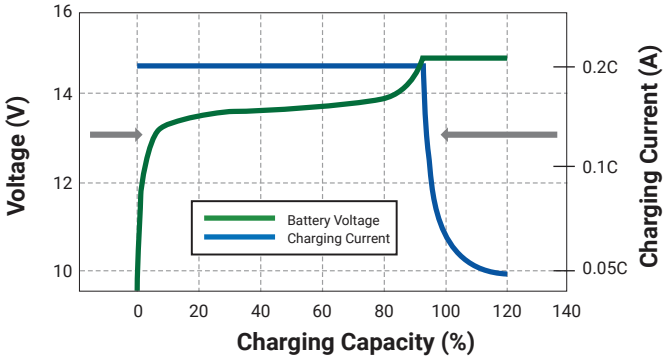

CYCLE LIFE PERFORMANCE CURVE @ 25°C

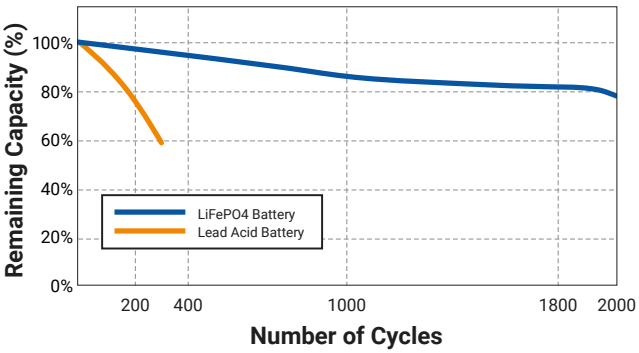

DISCHARGE VOLTAGE PROFILES @ VARIOUS DISCHARGE RATES @ 25°C AMBIENT TEMPERATURES

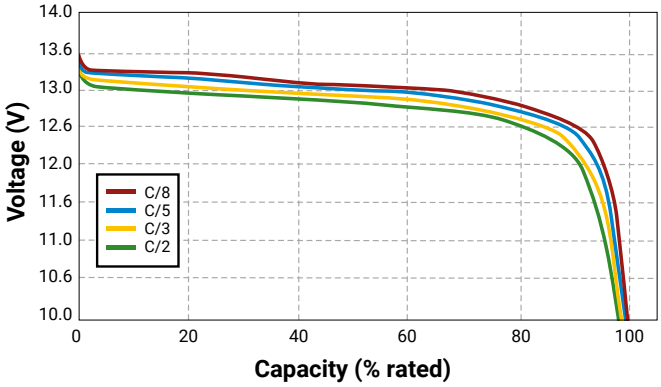

CHARGERS

Power Sonic offers a wide range of chargers suitable for batteries with a variety of capacities.

Please refer to our website for more information on our switch mode and transformer type chargers.

Please contact our technical department for advice if you have difficulty in locating a suitable charger.

FURTHER INFORMATION

Please refer to our website **www.power-sonic.com** for a complete range of useful downloads, such as product catalogs, material safety data sheets (MSDS), ISO certification, etc.

APPLICATIONS

- Medical
- Solar
- Wind
- Mobility
- Data Center
- Transport
- Sports & Recreation
- Utility

CORPORATE HEADQUARTERS
(USA AND INTERNATIONAL EXCLUDING EMEA)

Power-Sonic Corporation
7550 Panasonic Way, San Diego,
California 92154
T: +1 (619) 661 2020
F: +1 (619) 661 3650
E: customer-service@power-sonic.com

POWER-SONIC EUROPE LIMITED
(EMEA – EUROPE, MIDDLE EAST AND AFRICA)

3 Buckingham Square,
Hurricane Way, Wickford,
Essex SS11 8YQ
T: +44 (0)1268 560686
F: +44 (0)1268 560902
E: salesEMEA@power-sonic.com

To ensure safe and efficient operation always refer to the latest edition of our Technical Manual, as published on our website.
© 2018. Power-Sonic Corporation. All rights reserved. All trademarks are the property of their respective owners.
All data subject to change without notice. E&O.E

power-sonic.com

Rev1: 12/18