Hybrid Solar Inverter

OCT-S-I(8-12KW)

- Dual outputs for smart load management.
- Power Factor 1.0.
- Max Inverter Efficiency 96.5%.
- Paraleloperation up to 9 units.
- 1.5 times PV input power configuration.
- 2 strings of MPPT.
- 65V - 500V wide-range PV input operating voltage.
- The built-in ATS can automatically switch between generator power and mains power input.
- The working duration of the generator and the charging current can be set.

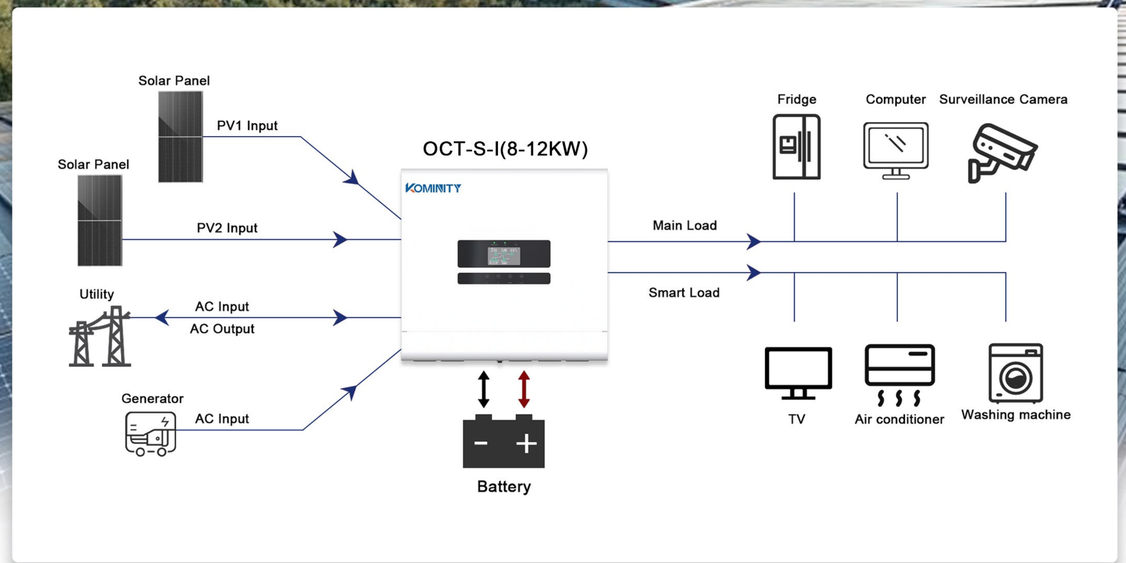

Modle	OCT-S-I-8KW	OCT-S-I-10KW	OCT-S-I-12KW
AC Output (Off Grid)			
Rated Power	8KW/8KVA	10KW/10KVA	12KW/12KVA
Surge Power	16KW/16KVA	20KW/20KVA	24KW/24KVA
Parallel Option	9Pcs		
AC Output Voltage	208/220/230/240Vac(Settable)		
Rated AC Output Frequency	50Hz / 60Hz (Auto detection)		
Max Bypass Output Current	70A	70A	70A
AC Output Interface	Load+Smart Load		
Max Inverter Efficiency	96.5%（PV/AC）		
Transfer Time	<10ms@Single,<30ms @ Parallel		
Output Waveform	Pure Sine Wave		
Power Factor	1		
No-Load Loss	<75W@Rate Voltage		
AC Output (On Grid)			
Rated Power	8KW/8KVA	10KW/10KVA	12KW/12KVA
Power Factor	0.8 leading to 0.8 lagging		
Rated Voltage	230Vac		
Rated Grid Frequency	50Hz		
Max Output Current	35A	44A	53A
THD	＜5%		
PV input			
Type Of PV Array Input Terminal	Screw-type terminal block		
Number Of MPPT Trackers	2		
Max PV Input Power	6000W*2	7500W*2	9000W*2
Max PV Array Open Circuit Voltage	550Vdc		
Rated Input Voltage Of Photovoltaic System	380Vdc		
Max PV Input Current	27A*2		
Startup Voltage	65Vdc		
MPPT Voltage Range	65~500Vdc		
Battery			
Compatible Battery Types	Lithium battery, lead-acid battery		
Rated Battery Voltage	48V		
Battery Voltage Range	38.4Vdc~60Vdc		
Minimum Cold Start Battery Voltage	46Vdc		
Battery Overcharge Protection Voltage	60Vdc		
Max Solar Charging Current	190A	220A	250A
Max AC Charging Current	170A	190A	210A
Max Charine Curent(PV+AC)	190A	220A	250A
Max Charging Power	8000W	10000W	12000W
MPP tracking efficiency	99.9%		
Activate The Lithium Battery Function	PV/AC		
Mechanical Specifications			
Inverter Dimensions	467*395*135mm		
Packing Measurements	550*470*230mm		
Net Weight	17.7Kg	17.8Kg	18Kg
Gross Weight	18.7Kg	18.8Kg	19Kg
Communication Interface	USB / CAN /RS485/CT		
Monitoring Option	WiFi Module		
Quality Guarantee	3 years		
Environment			
Protection Degree	IP20		
Humidity	5%~95% non-condensing		
Altitude	<2000 Meters		
Operating Temperature	-10℃~50℃		
Storage Temperature	-15℃~60℃		
Noise	＜60db		
Type Of Cooling	Fan		
Certificate	CE、NRS097/EN50549-1/EN50549-10		