Three Phase Hybrid Solar Inverter

OCT-T-I-15KW

- Dual outputs for smart load management.
- Power Factor 1.0.
- Max Inverter Efficiency 95%.
- Paraleloperation up to 9 units.
- 2 strings of MPPT.
- 120V - 900V wide-range PV input operating voltage.
- The maximum charging power of 16.3KW.
- The built-in ATS can automatically switch between generator power and mains power input.
- The working duration of the generator and the charging current can be set.

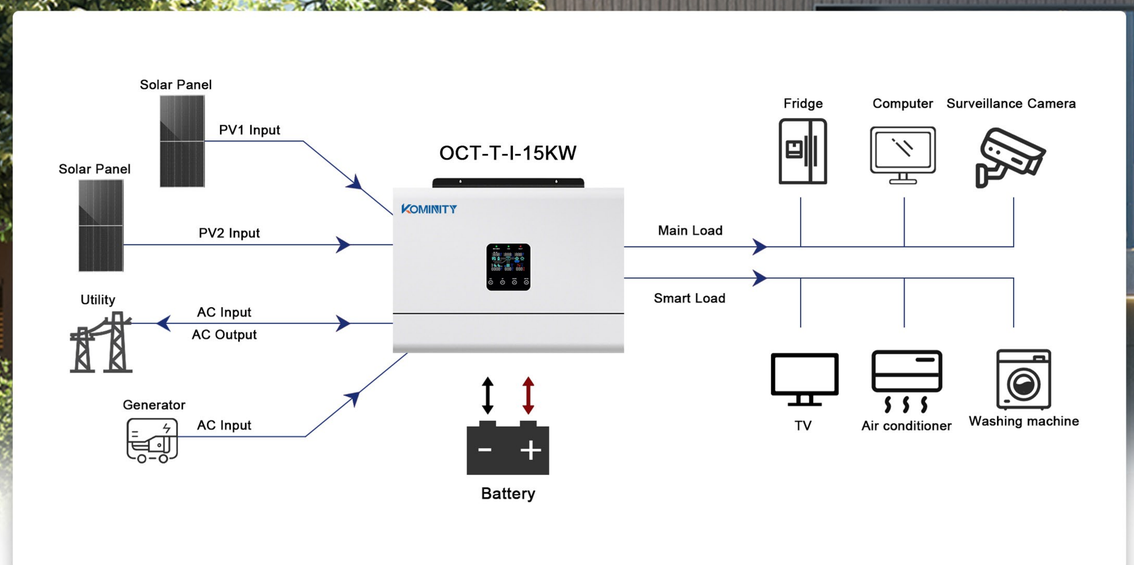

Modle	OCT-T-I-15KW
AC Output	
Rated Power	15KW/15KVA
Surge Power	30KW/30KVA
Parallel Option	9Pcs
AC Output Voltage	230Vac(L-N)/400Vac(L-L)±2%
Rated AC Output Frequency	50/60Hz auto sensing
Max Bypass Output Current	21.7A (per phase)
AC Output Interface	Load+Smart Load
Peak Efficiency	95%（BAT/AC）
Transfer Time	<10ms@Single,<20ms @ Parallel
Output Waveform	Pure Sine Wave
Power Factor	1
No-Load Loss	<75W@Rate Voltage
PV input	
Type Of PV Array Input Terminal	Screw-type terminal block
Number Of MPPT Trackers	2
Max PV Input Power	9500W*2
Max PV Array Open Circuit Voltage	1050Vdc
Rated Input Voltage Of Photovoltaic System	600Vdc
Max PV Input Current / Per String	27A*2
Startup Voltage	150Vdc±10Vdc
MPPT Voltage Range	120~900Vdc
Battery	
Compatible Battery Types	lithium battery、lead-acid
Rated Battery Voltage	48V
Battery Voltage Range	38.4Vdc~60Vdc
Minimum Cold Start Battery Voltage	46Vdc
Battery Overcharge Protection Voltage	60Vdc
Max Solar Charging Current	280A
Max AC Charging Current	280A
Max Charging Current (PV+AC)	280A
Max Charging Power	16.3KW
MPP tracking efficiency	99.9%
Activate The Lithium Battery Function	Yes, PV+AC
Mechanical Specifications	
Inverter Dimensions	580*500*145mm
Packing Measurement	700*600*220mm
Net Weight	24kg
Gross Weight	28Kg
Communication Interface	USB / CAN /RS485/CT
Monitoring Option	WiFi Module
Quality Guarantee	3 years
Environment	
Protection Degree	IP20
Humidity	5%~95% non-condensing
Altitude	<2000 Meters
Operating Temperature	-10℃~50℃
Storage Temperature	-15℃~60℃
Noise	＜60db
Type Of Cooling	Fan
Certificate	Compliant with NRS097/EN50549-1/EN50549-10CE，and other certification standards