Hybrid Solar Inverter

OCT-P-I(6-12KW)

- Full-power single- & split-phase.
- Integrated design.
- Built-in dual MPPT.
- PV input power is 1.5 times the AC rating.
- Up to 9 units can be paralleled.
- 3-years warranty.
- Intelligent dual AC outputs.
- Hybrid load support capability.
- Dedicated generator input interface.

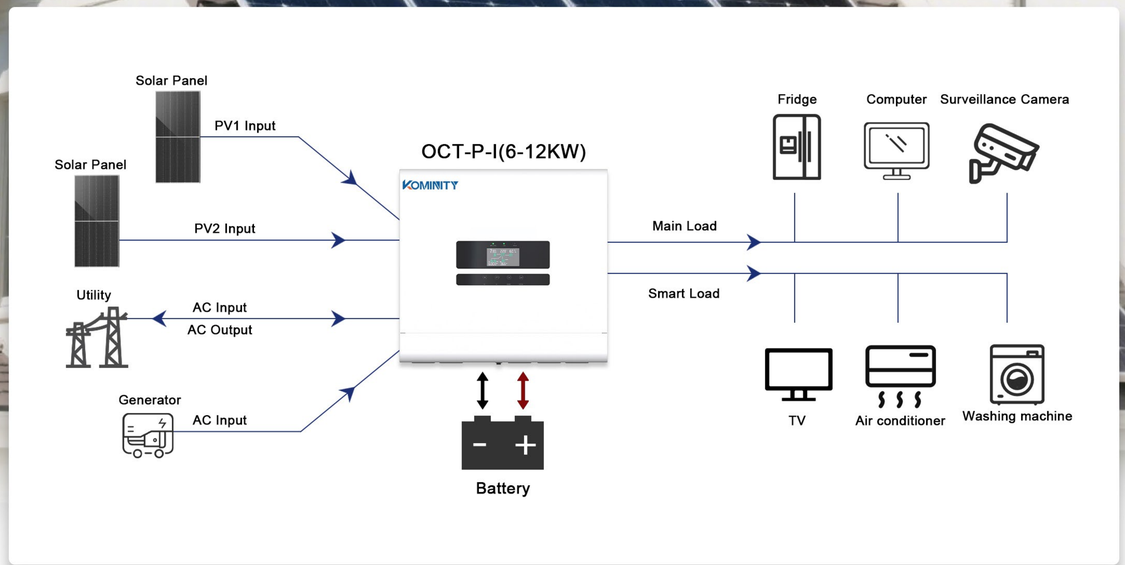

Modle	OCT-P-I-6KW	OCT-P-I-8KW	OCT-P-I-10KW	OCT-P-I-12KW
AC Output				
Rated Power	6KW/6KVA	8KW/8KVA	10KW/10KVA	12KW/12KVA
Surge Power	12KW/12KVA	16KW/16KVA	20KW/20KVA	24KW/24KVA
Parallel Option	9Pcs			
AC Output Voltage	Single Phase：100V/110V/120V/127V Split Phase： 120V/240V 2/3 Phase：127V/220V Parallel Mode Three-Phase：120V/208V			
Rated AC Output Frequency	50Hz / 60Hz (Auto detection)			
Max Bypass Output Current	50A	70A	70A	70A
AC Output Interface	Load+Smart Load			
Max Inverter Efficiency	96.5%（PV/AC）			
Transfer Time	<20ms@Single,<30ms @ Parallel			
Output Waveform	Pure Sine Wave			
Power Factor	1			
No-Load Loss	<75W@Rate Voltage			
AC Output (On Grid)				
Rated Power	6KW/6KVA	8KW/8KVA	10KW/10KVA	12KW/12KVA
Power Factor	0.8 leading to 0.8 lagging			
Rated Voltage	Single Phase：120V Split Phase：120V/240V 2/3 Phase：127V/220V Parallel Mode Three-Phase：120V/208V			
Rated Grid Frequency	60Hz			
Max Output Current	27A	35A	43A	52A
THD	＜5%			
PV input				
Type Of PV Array Input Terminal	Screw-type terminal block			
Number Of MPPT Trackers	2			
Max PV Input Power	4500W+4500W	6000W+6000W	7500W+7500W	9000W+9000W
Max PV Array Open Circuit Voltage	550Vdc	550Vdc	550Vdc	550Vdc
Rated Input Voltage Of Photovoltaic	380Vdc	380Vdc	380Vdc	380Vdc
System				
Max PV Input Current/ Per String	27A*2	27A*2	27A*2	27A*2
Startup Voltage	120Vdc	120Vdc	120Vdc	120Vdc
MPPT Voltage Range	65~480Vdc	65~480Vdc	65~480Vdc	65~480Vdc
Battery				
Compatible Battery Types	Lithium battery, lead-acid battery			
Rated Battery Voltage	48V			
Battery Voltage Range	38.4Vdc~60Vdc			
Minimum Cold Start Battery Voltage	46Vdc			
Battery Overcharge Protection Voltage	60Vdc			
Max Charging / Discharging Current	140A	190A	220A	250A
Max Charging Power	6000W	8000W	10000W	12000W
MPP tracking efficiency	99.9%			
Activate The Lithium Battery Function	Yes, PV+AC			
Mechanical Specifications				
Inverter Dimensions	387*282*133mm	470*430*135mm	470*430*135mm	470*430*135mm
Packing Measurement	475*440*203mm	560*550*210mm	560*550*210mm	560*550*210mm
Net Weight	9.1kg	17.7kg	17.8kg	18kg
Gross Weight	10.5kg	18.7kg	18.8kg	19kg
Communication Interface	USB / CAN /RS485/CT			
Monitoring Option	WiFi Module			
Quality Guarantee	3 years			
Environment				
Protection Degree	IP20			
Humidity	5%~95% non-condensing			
Altitude	<2000 Meters			
Operating Temperature	-10℃~50℃			
Storage Temperature	-15℃~60℃			
Noise	＜60db			
Type Of Cooling	Fan			
Certificate	UL 1741、FCC			