BIN-S-I-6KW

- Dual outputs for smart load management
- Rated power at 6KW, power factor 1.0
- Parallel operation up to 9 units
- 2 strings of MPPT
- Max PV. array power 8000watt
- 500Vdc high PV input voltage
- The built-in ATS can automatically switch between generator power and mains power input
- WiFi monitor (Optional)
- Overload, short circuit and deep discharge protection
- Can provide the power to the load without battery

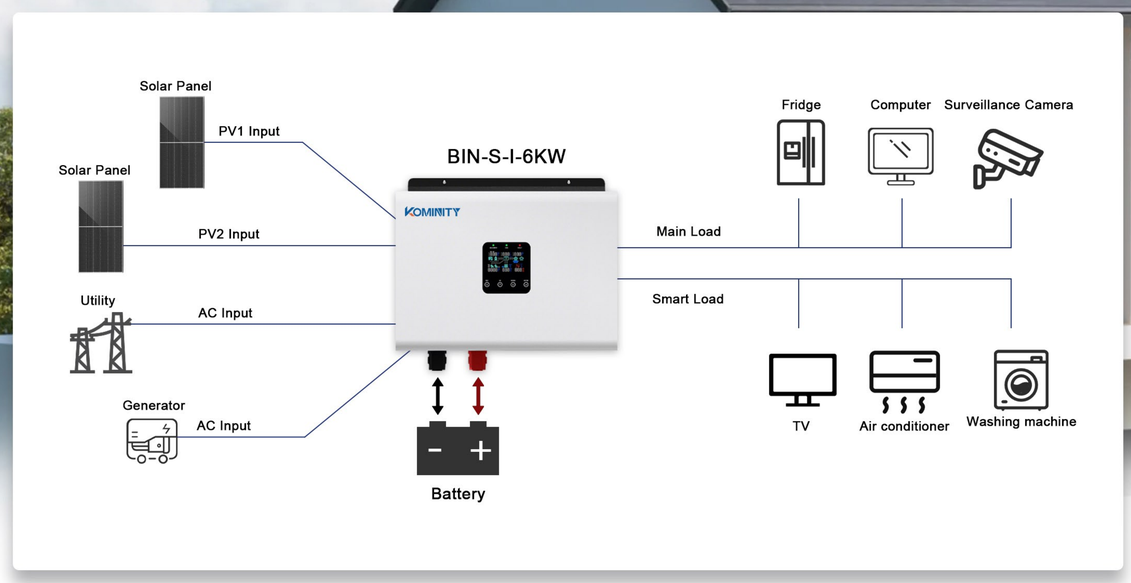

Modle	BIN-S-I-6KW
AC Output	
Rated Power	6KVA/6KW
Surge Power	12KW/12KVA
Parallel Option	9PCS
AC Output Voltage	208/220/230/240Vac(Settable)
Rated AC Output Frequency	50/60Hz
Max Bypass Output Current	40A
AC Output Interface	Load+Smart Load
Max Inverter Efficiency	94%
Transfer Time	<20ms@Single, <30ms @ Parallel
Output Waveform	Pure Sine Wave
Power Factor	1
No-Load Loss	<45W@Rate Voltage
PV Input	
Type Of PV Array Input Terminal	Insertion-type Terminal Block
Number Of MPP Trackers	2
Max PV Input Power	4000W*2
Max PV Array Open Circuit Voltage	500Vdc
Rated Input Voltage Of Photovoltaic System	250Vdc
Max PV Input Current	16A *2
Startup Voltage	100Vdc±10Vdc
MPPT Voltage Range	65Vdc-450Vdc
Battery	
Compatible Battery Types	Lead-acid、Lithium battery
Rated Battery Voltage	48Vdc
Battery Voltage Range	40Vdc-60Vdc
Minimum Cold Start Battery Voltage	46Vdc
3attery Overcharge Protection Voltage	60Vdc
Max Solar Charging Current	100A
Max AC Charging Current	80A
Max Charging Current(PV+AC)	100A
Max Charging Power	5800W
MPPT Charging Efficiency	99%
Activate The Lithium Battery Function	PV+AC
Mechanical Specifications	
Inverter Dimensions	387*282*114mm
Packing Measurements	475*440*203mm
Net Weight	9.1KG
Gross Weight	10.5KG
Communication Interface	USB / CAN / RS485
Monitoring Option	WiFi Module
Quality Guarantee	3 Years
Environment	
Protection Degree	IP20
Humidity	5% to 95% Relative Humidity (Non-condensing)
Altitude	<2000 Meters
Operating Temperature	-10℃~50℃
Storage Temperature	-15℃~60℃
Noise	<60dB
Type Of Cooling	Fan
Certificate	CE, IEC62109-1, IEC62109-2