Adventurer

RENOGY 30A
Flush Mount Charge Controller Manual

RENOGY
THE FUTURE OF CLEAN ENERGY

2775 E. Philadelphia St., Ontario, CA 91761
1-800-330-8678

⚠ Important Safety Instructions ⚠

Please save these instructions.

This manual contains important safety, installation, and operating instructions for the charge controller. The following symbols are used throughout the manual:

⚠ **WARNING: Indicates a potentially dangerous condition. Use extreme caution when performing this task.**

CAUTION: Indicates a critical procedure for safe and proper operation of the controller

NOTE: Indicates a procedure or function that is important to the safe and proper operation of the controller.

General Safety Information

- Read all of the instructions and cautions in the manual before beginning the installation.
- There are no serviceable parts for this controller. Do **NOT** disassemble or attempt to repair the controller.
- Make sure all connections going into and from the controller are tight. There may be sparks when making connections, therefore, make sure there are not flammable materials or gases near installation.

Charge Controller Safety

- **NEVER** connect the solar panel array to the controller without a battery. Battery must be connected first. This may cause a dangerous occurrence where the controller would experience a high open circuit voltage at the terminals.
- Ensure input voltage does not exceed 25 VDC to prevent permanent damage. Use the Open Circuit (V_{oc}) to make sure the voltage does not exceed this value when connecting panels together in series.
- The charge controller should be installed indoors in a well-ventilated, cool, and dry environment.
- Do **NOT** allow water to enter the controller.

Battery Safety

- Do **NOT** let the positive (+) and negative (-) terminals of the battery touch each other.
- Use only sealed lead-acid, flooded, or gel batteries which must be deep cycle.
- Explosive battery gases may be present while charging. Be certain there is enough ventilation to release the gases.

- Be careful when working with large lead acid batteries. Wear eye protection and have fresh water available in case there is contact with the battery acid.
- Over-charging and excessive gas precipitation may damage the battery plates and activate material shedding on them. Too high of an equalizing charge or too long of one may cause damage. Please carefully review the specific requirements of the battery used in the system.

WARNING: Connect battery terminals to the charge controller BEFORE connecting the solar panel(s) to the charge controller. NEVER connect solar panels to charge controller until the battery is connected.

Table of Contents

General Information

The Adventurer is an advanced charge controller for off-grid solar applications. Integrating highly efficient PWM charging, this controller increases battery life and improved system performance. It can be used for 12V battery or battery bank. The controller is embedded with self-diagnostics and electronic protection functions that prevent damages from installation mistakes or system faults.

Key Features

- Optimized for 12 VDC system voltage
- 30A charging capacity
- LCD screen for displaying system operating information and data.
- Full control of parameter settings that can be adjusted.
- Sealed, Gel, and Flooded battery option.
- 4 Stage PWM charging: Bulk, Boost. Float, and Equalization
- Temperature compensation and correcting the charging and discharging parameters automatically, improving battery lifetime.
- Protection against: overcharging, overload, short-circuit, and reverse polarity.
- Negative ground controller
- Specifically designed for RV application and allows for aesthetically clean flush mounting on walls
- Remote temperature compensation compatible
- Remote battery voltage sensor compatible

PWM Technology

The Adventurer utilizes Pulse Width Modulation (PWM) technology for battery charging. Battery charging is a current based process so controlling the current will control the battery voltage. For the most accurate return of capacity, and for the prevention of excessive gassing pressure, the battery is required to be controlled by specified voltage regulation set points for Absorption, Float, and Equalization charging stages. The charge controller uses automatic duty cycle conversion, creating pulses of current to charge the battery. The duty cycle is proportional to the difference between the sensed battery voltage and the specified voltage regulation set point. Once the battery reached the specified voltage range, pulse current charging mode allows the battery to react and allows for an acceptable rate of charge for the battery level

Four Charging Stages

The Adventurer has a 4-stage battery charging algorithm for a rapid, efficient, and safe battery charging. They include: Bulk Charge, Boost Charge, Float Charge, and Equalization.

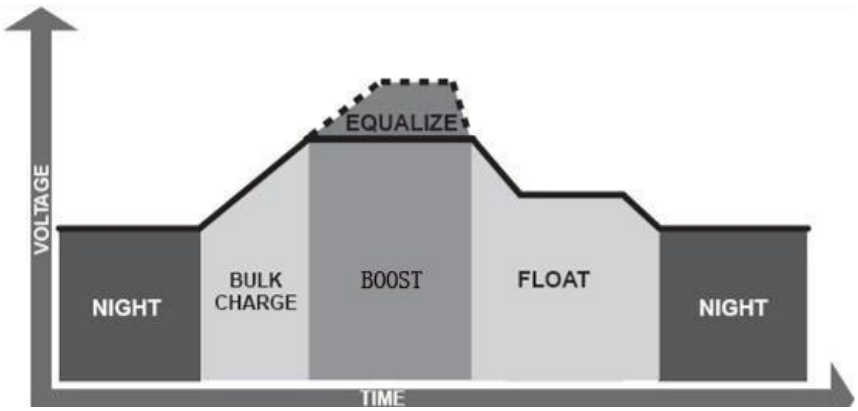

Bulk Charge: This algorithm is used for day to day charging. It uses 100% of available solar power to recharge the battery and is equivalent to constant current.

Boost Charge: When the battery has charged to the Boost voltage set-point, it undergoes an absorption stage which is equivalent to constant voltage regulation to prevent heating and excessive gassing in the battery. The default time for this is 120 minutes but it can be customizable as needed.

Float Charge: After Boost Charge, the controller will reduce the battery voltage to a float voltage set point. Once the battery is fully charged, there will be no more chemical reactions and all the charge current would turn into heat or gas. Because of this, the charge controller will reduce the voltage charge to smaller quantity, while lightly charging the battery. The purpose for this is to offset the power consumption while maintaining a full battery storage capacity. In the event that a load drawn from the battery exceeds the charge current, the controller will no longer be able to maintain the battery to a Float set point and the controller will end the float charge stage and refer back to bulk charging.

Equalization: Is carried out every 28 days of the month. It is intentional overcharging of the battery for a controlled period of time. Certain types of batteries benefit from periodic equalizing charge, which can stir the electrolyte, balance battery voltage and complete chemical reaction. Equalizing charge increases the battery voltage, higher than the standard complement voltage, which gasifies the battery electrolyte.

WARNING: **Once equalization is active in the battery charging, it will not exit this stage unless there is adequate charging current from the solar panel. There should be NO load on the batteries when in equalization charging stage.**

WARNING: **Over-charging and excessive gas precipitation may damage the battery plates and activate material shedding on them. Too high of equalizing charge or for too long may cause damage. Please carefully review the specific requirements of the battery used in the system.**

Included Components

NOTE: The Adventurer is shipped with its own screws for flush mounting.

Figure 1

Remote Temperature Sensor (TS-R): Measures the temperature at the battery and uses this data for very accurate temperature compensation. The sensor is supplied with a 6.6ft cable length that connects to the charge controller. (**Figure 1)**

NOTE: The Adventurer comes equipped with a temperature sensor, but it is **ONLY** for the charge controller's temperature compensation, not the battery's temperature compensation.

Figure 2

Remote Battery Voltage Sensor (RBVS): Measures battery voltage accurately. The voltage detected at the battery terminals on the controller may differ from the real battery voltage due to the connection and cable resistance. Therefore this sensor, though not required, is recommended for best performance. (**Figure 2)**

Identification of Parts

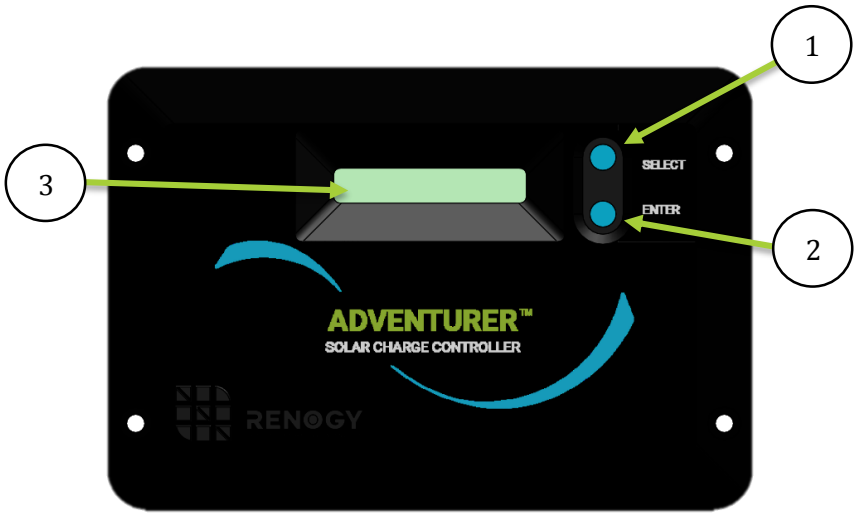

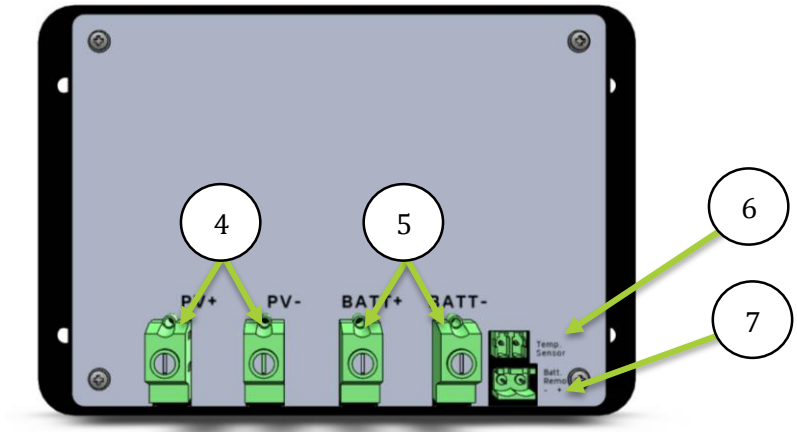

Key Parts

1. **Select Button**
2. **Enter Button**
3. **Liquid Crystal Display (LCD)**
4. **PV terminals**
5. **Battery Terminals**
6. **Remote Temperature Sensor Terminal (optional accessory)**
7. **Remote Battery Voltage Sensor Terminal (optional accessory)**

Installation

WARNING: Connect battery terminal wires to the charge controller FIRST then connect the solar panel(s) to the charge controller. NEVER connect solar panel to charge controller before the battery.

CAUTION: Do not over-torque or over tighten the screw terminals. This could potentially break the piece that holds the wire to the charge controller.

CAUTION: Refer to the technical specifications for max wire sizes on the controller and for the maximum amperage going through wires.

Mounting Recommendations:

WARNING: Never install the controller in a sealed enclosure with flooded batteries. Gas can accumulate and there is a risk of explosion.

The Adventurer is designed for flush mounting on a wall. It consists of a face plate with projecting terminals on the backside for connecting the battery bank, panels, and optional sensors for accurate battery voltage sensing and battery temperature compensation. If utilizing the wall mount, then the wall will be required to be cut to accommodate the projecting terminals on the backside. Make sure that the pocket of the wall cut leaves enough space to not damage the terminals when the Adventurer is being pushed back into the cut out section of the wall.

The front of the Adventurer will serve as a heat sink, therefore it is important to ensure that the mounting location is not near any heat generating sources and ensure that there is proper airflow across the faceplate of the Adventurer to remove the heat dissipated from the surface.

1. **Choose Mounting Location—**place the controller on a vertical surface protected from direct sunlight, high temperatures, and water. Make sure there is good ventilation.
2. **Check for Clearance—**verify that there is sufficient room to run wires, as well as clearance above and below the controller for ventilation. The clearance should be at least 6 inches (150mm).
3. **Cut out Wall section—**the recommended wall size to be cut should follow the inner protruding part of the charge controller while being careful not to go past the mounting holes. The depth should be at least 1.7 inches (43mm).
4. **Mark Holes**
5. **Drill Holes**
   NOTE: The Adventurer comes equipped with screws for wall mounting. If they are not suitable try ***using Pan Head Phillips Screw 18-8 Stainless Steel M3.9 Size 25mm length screws***.
6. **Secure the charge controller.**

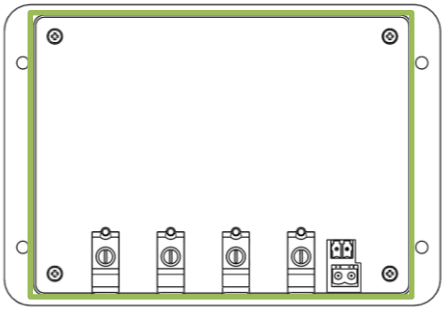

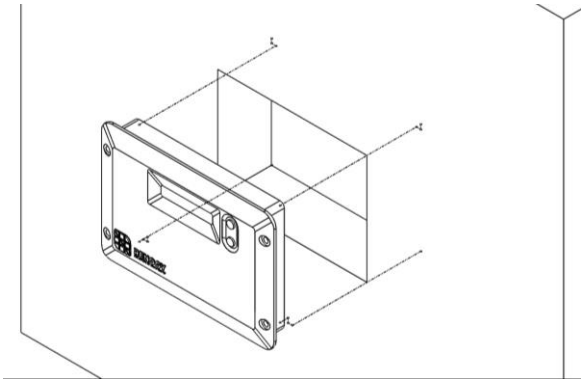

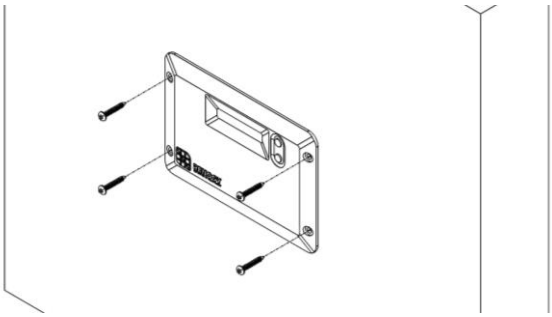

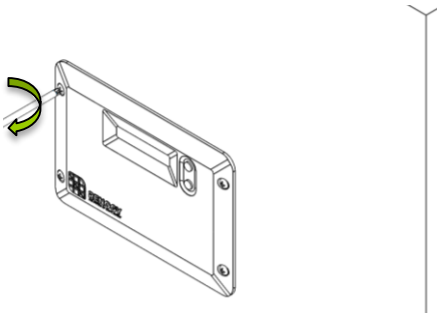

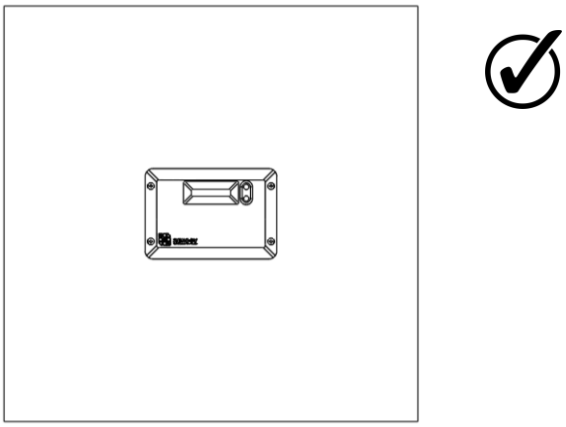

Wiring

1. **Unscrew battery terminals and connect battery connections**

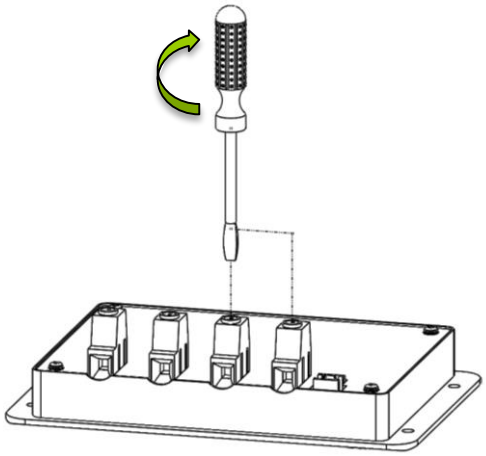

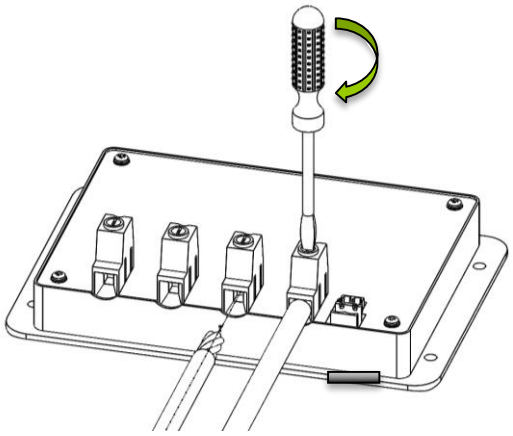

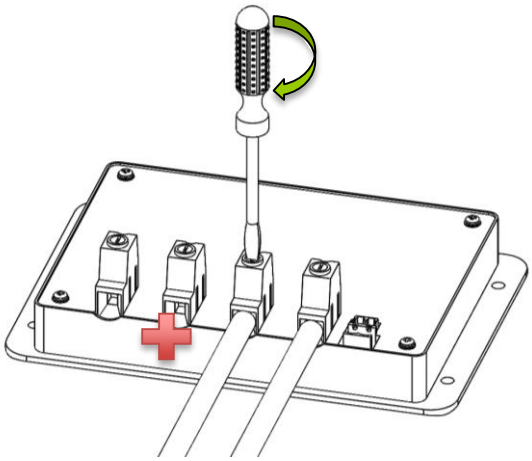

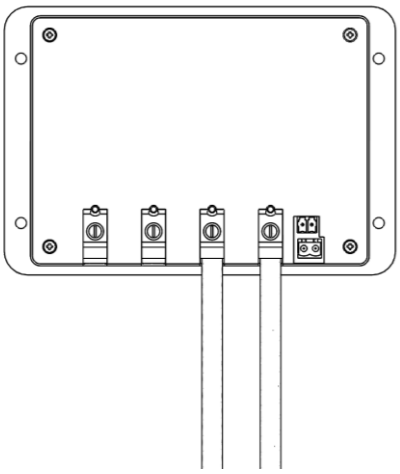

2. Unscrew PV terminals and connect PV connections

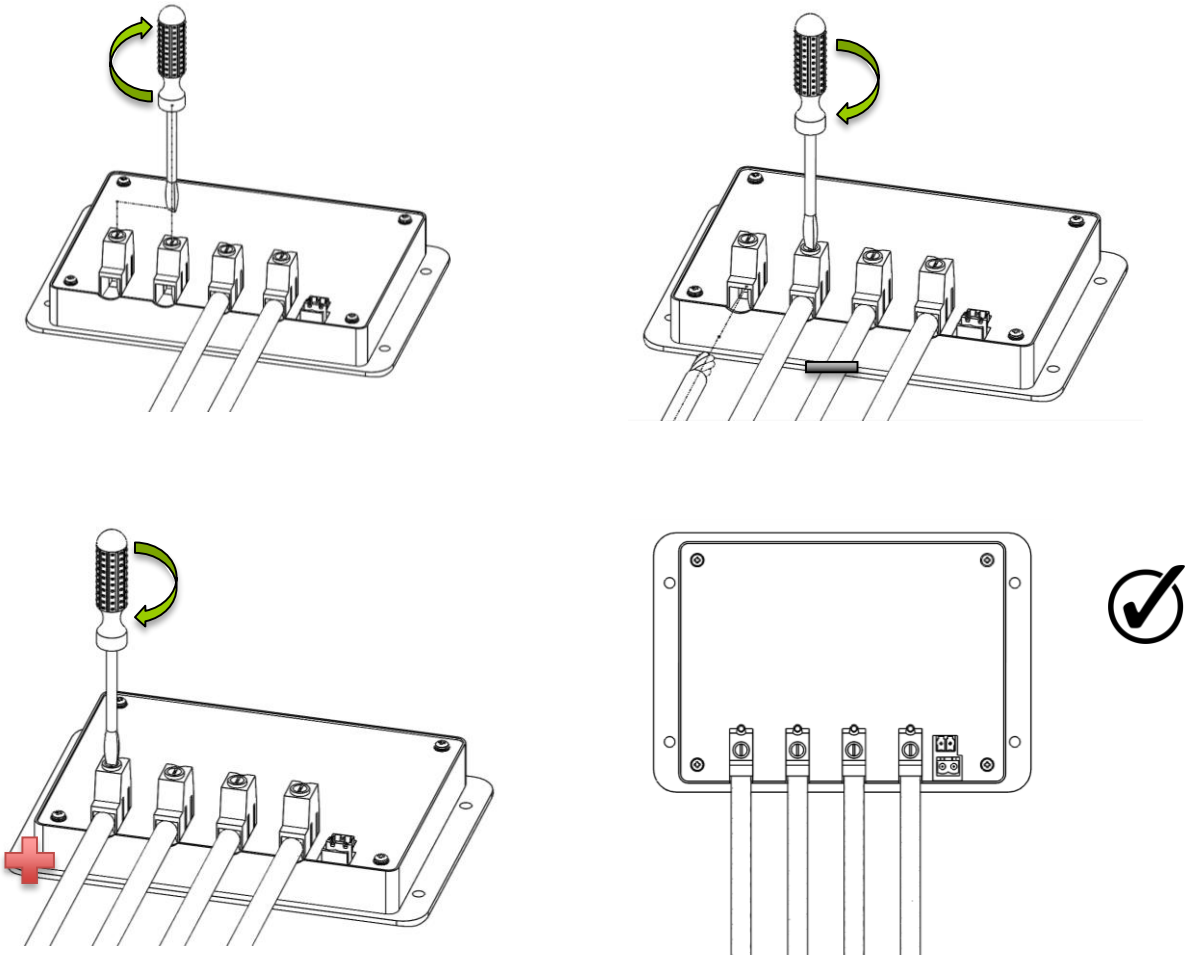

3. Insert temperature sensor block terminal and connect wires (POLARITY SENSITIVITY DOES NOT MATTER)

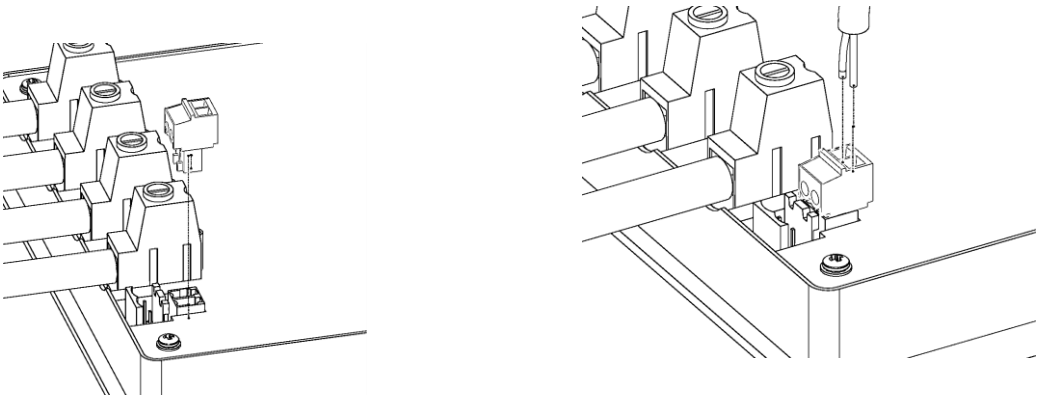

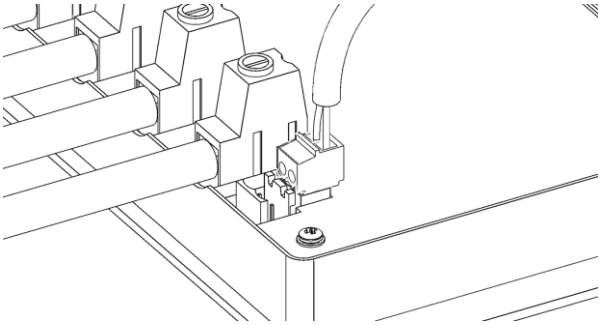

4. Insert battery remote sensor block terminal and connect wires (POLARITY SENSITIVE)

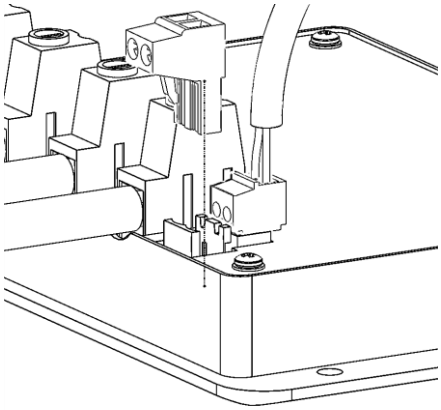

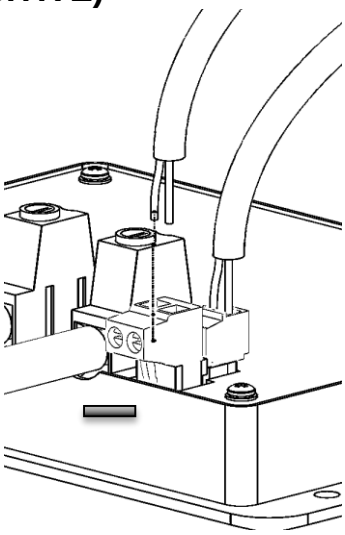

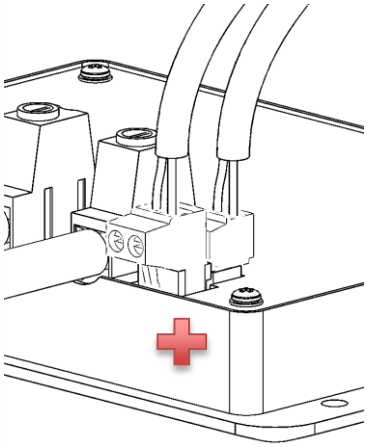

Operation

After connecting the battery to the charge controller, the controller will turn on automatically. Assuming normal operation, the charge controller will cycle through different display. They are as follows:

Parameter	Display		
PV Array Voltage		PV	0.0 V
Charging Current		PV	0.0 A
Generated Energy		PV	0.0 kWh
Battery Voltage		BATT	0.0 V
Battery SOC%		BATT	0.0 %
Temperature		BATT	0.0 F°

The Adventurer is an easy to use controller requiring minimal maintenance. The user is able to adjust some parameters based on the display screen. The user can manually cycle through the display screens by using the “SELECT” and “ENTER” buttons

	SELECT	Cycles forwards through the different display screens.

ENTER	Cycles backwards through the different select screens & Customize some parameters on the charge controller

Adjustable Parameters

Simply hold the “ENTER” button for approximately 5 seconds until the display flashes. Once flashing, then press “SELECT” until the desired parameter is reached and press “ENTER” one more time to lock in the parameter.

1. Generated Energy Interface

The user is able to reset the current power generation (kWh) back to 0 kWh.

2. Battery Voltage Interface

In this interface, the user is able to select which type of battery is connected to the charge controller. Choose from Sealed, Gel, or Flooded batteries.

3. Battery Temperature Interface

The user can select between displaying battery temperature in Celsius or Fahrenheit.

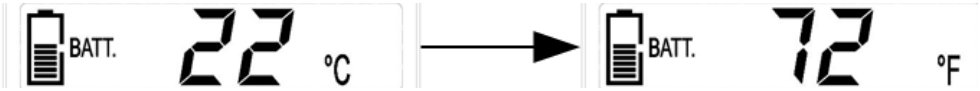

System Status Icons

Icon	Behavior
	Constant: System is normal, but it is not charging
	Charging: The bars will be sequencing indicating the system is charging.
	Constant: The battery is at full charge.
	Flashing: The battery is overvoltage.
	Flashing: The battery is under voltage.

System Status Troubleshooting

Indicator	Description	Troubleshoot
Flashing	Battery over voltage	Use a multi-meter to check the voltage of the battery. Make sure the battery voltage is not exceeding the rated specification of the charge controller. Disconnect battery.
Flashing	Battery under voltage	Use a multi-meter to verify the rated battery voltage. Disconnect any loads connected to the battery to allow it to charge.
Other Considerations		
Charge controller does not charge during daytime when the sun is shining on the solar panels.		Confirm that there is a tight and correct connection from the battery bank to the charge controller and the solar panels to the charge controller. Use a multi-meter to check if the polarity of the solar modules have been reversed on the charge controller's solar terminals.
Everything is connected correctly, but the LCD on the controller does not turn on		Check the rated battery voltage. The LCD will not display on the charge controller unless there is at least 9V coming from the battery bank.

Maintenance

For best controller performance, it is recommended that these tasks be performed from time to time.

1. Check that controller is mounted in a clean, dry, and ventilated area.
2. Check wiring going into the charge controller and make sure there is no wire damage or wear.
3. Tighten all terminals and inspect any loose, broken, or burnt up connections
4. Make sure readings in the LCD and LED are consistent.

Fusing

Fusing is a recommendation in PV systems to provide a safety measure for connections going from panel to controller and controller to battery. Remember to always use the recommended wire gauge size based on the PV system and the controller.

NEC Maximum Current for different Copper Wire Sizes									
AWG	16	14	12	10	8	6	4	2	0
Max. Current	10A	15A	20A	30A	55A	75A	95A	130A	170A

Fuse from Controller to Battery
Controller to Battery Fuse = Current Rating of Charge Controller **Ex. FM30ACC = 30A fuse from Controller to Battery**

Fuse from Solar Panel(s) to Controller
Ex. 200W; 2 X 100 W panels **Parallel** **Total Amperage** = $I_{sc1} + I_{sc2}$ = 5.75A + 5.75A * 1.56 **Fuse** = minimum of 11.5 * 1.56 = 17.94 **= 18A fuse**

Technical Specifications

Description	Parameter
Nominal Voltage	12 VDC
Rated Charge Current	30A
Max. PV Input Voltage	25 VDC
Equalization Voltage	Sealed: 14.6 V; Gel: None; Flooded: 14.8 V
Boost Voltage	Sealed: 14.4 V; Gel: 14.2 V; Flooded: 14.6 V
Float Voltage	13.8 V
Under Voltage	12 V
Self-consumption	≤13mA
Temperature Compensation Coefficient	-3mV/℃/2V
Operating Temperature	-25℃ to +55℃ | -13ºF to 131ºF
Storage Temperature	-35℃ to +80℃ | -31ºF to 176ºF
Enclosure	IP20
Terminals	Up to #4 AWG

Dimensions

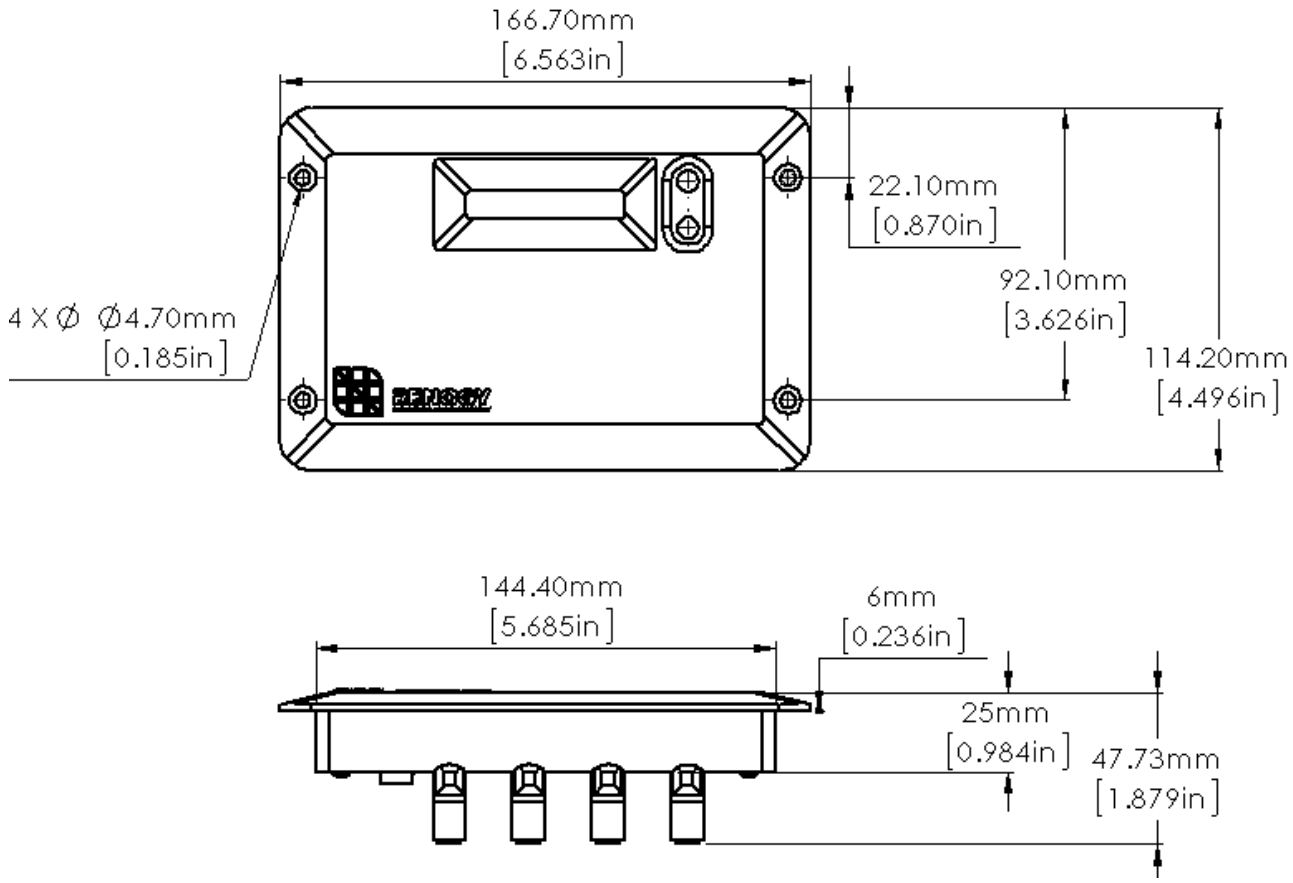

Wiring Diagrams

100W Wiring Diagram
12V Battery Bank

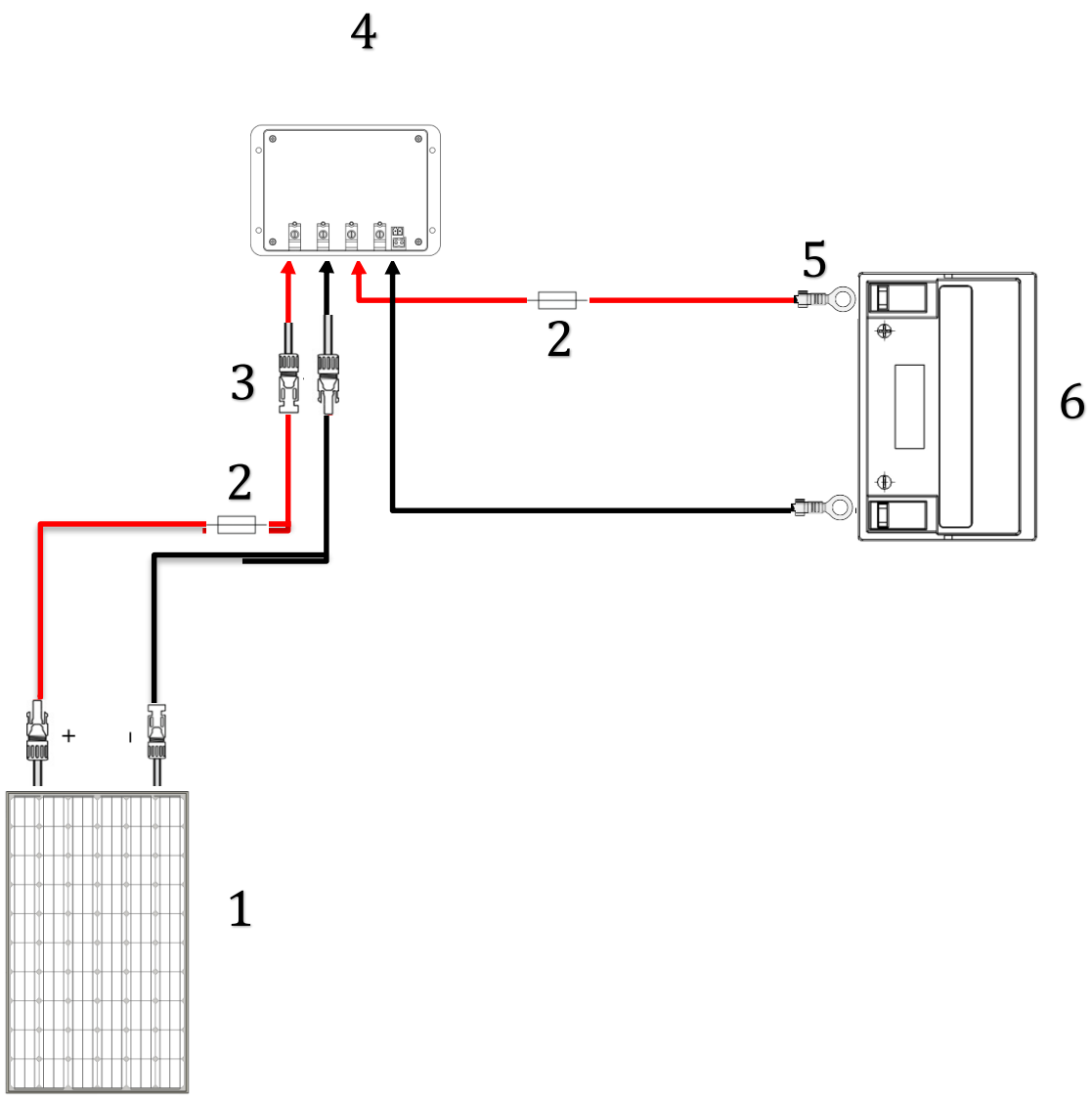

1. Solar Panel
2. Fuse
3. Adapter Kit
4. Charge Controller
5. Tray Cable
6. Battery Bank (12V)

200W Wiring Diagram—Parallel 12V Battery Bank

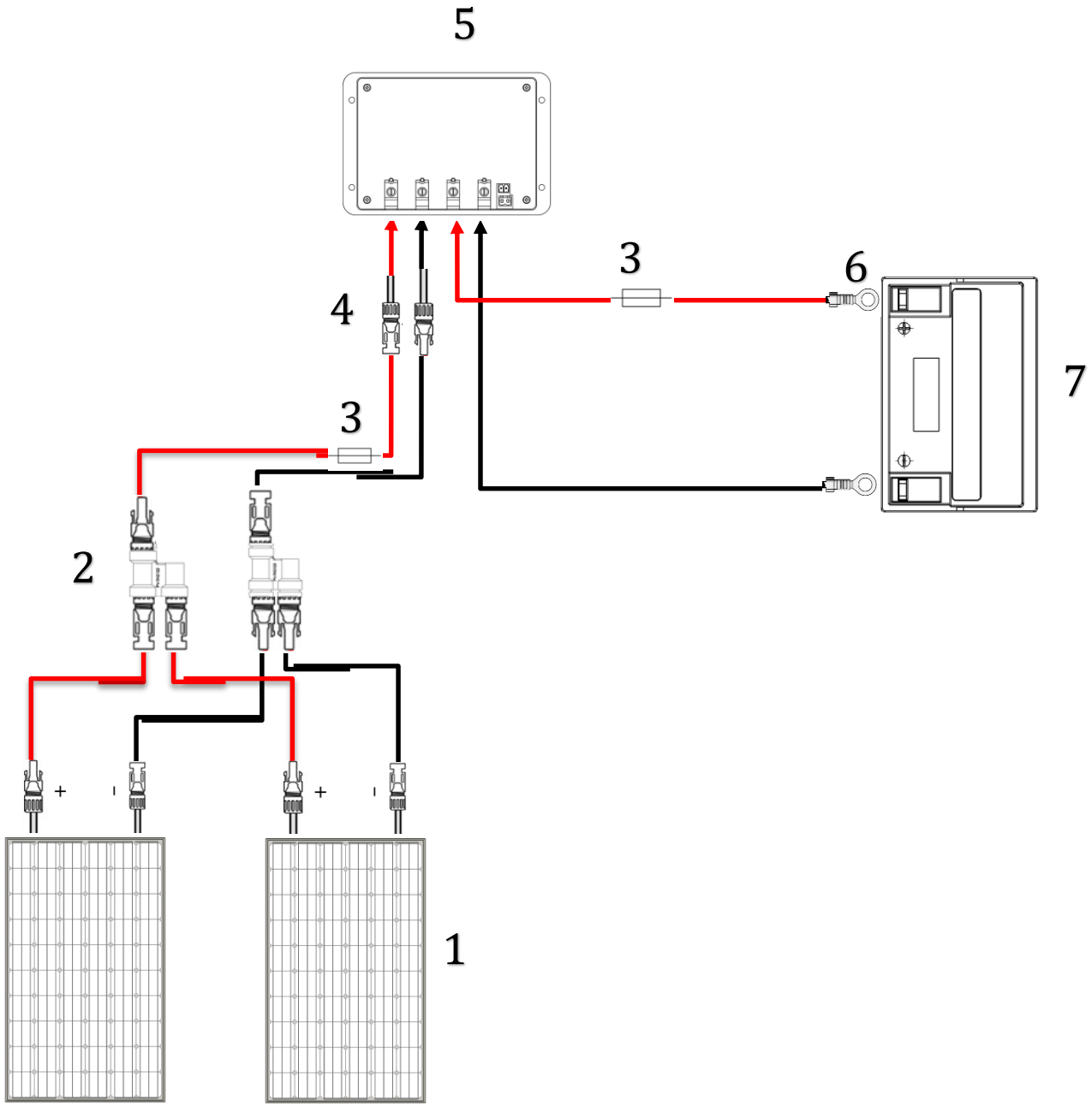

1. Solar Panels
2. MC4 Branch Connectors
3. Fuse
4. Adapter Kit
5. Charge Controller
6. Tray Cable
7. Battery Bank (12V)

300W Wiring Diagram—Parallel 12V Battery Bank

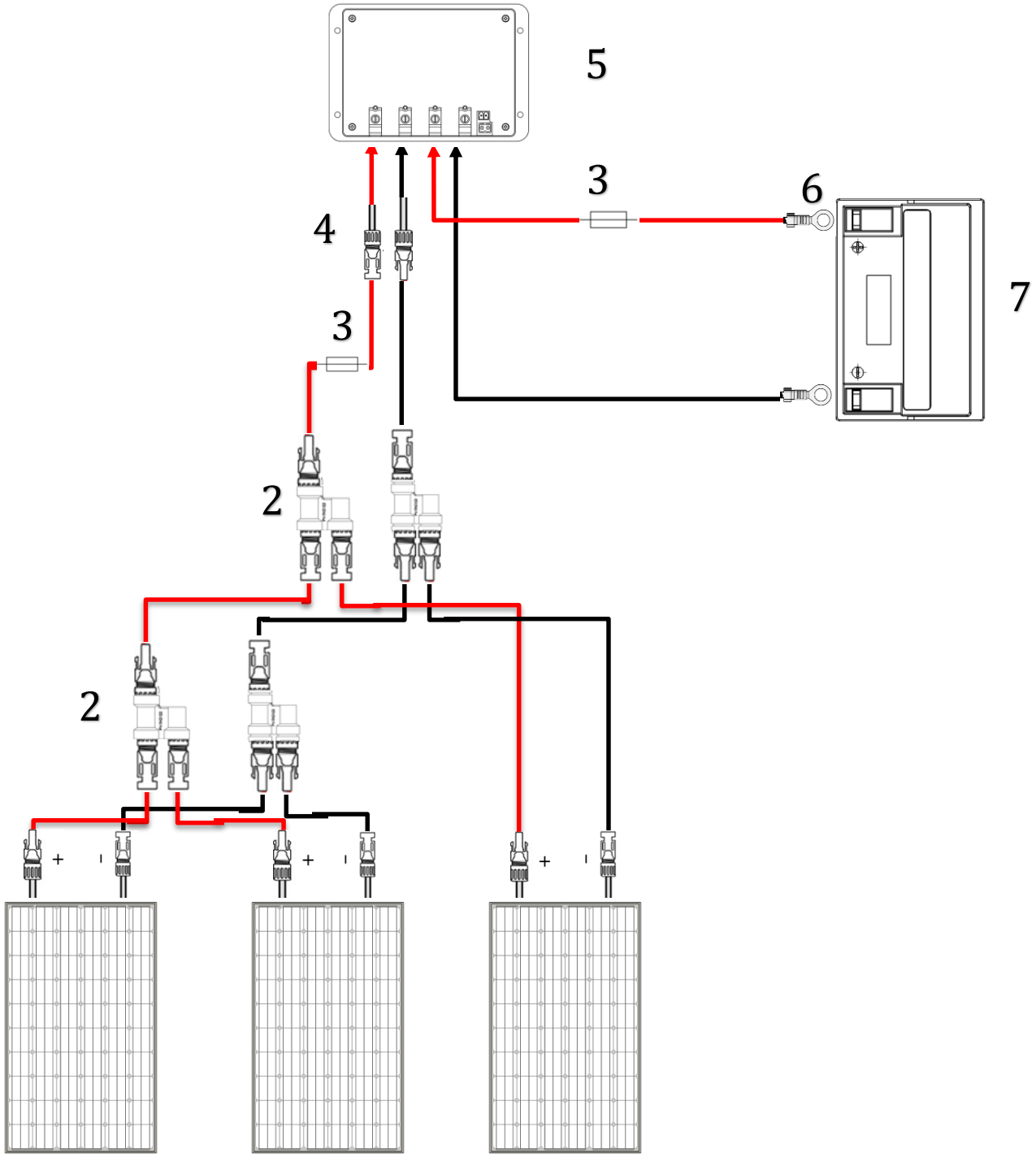

1. Solar Panels
2. MC4 Branch Connectors
3. Fuse
4. Adapter Kit
5. Charge Controller
6. Tray Cable
7. Battery Bank (12V)

400W Wiring Diagram—Parallel 12V Battery Bank

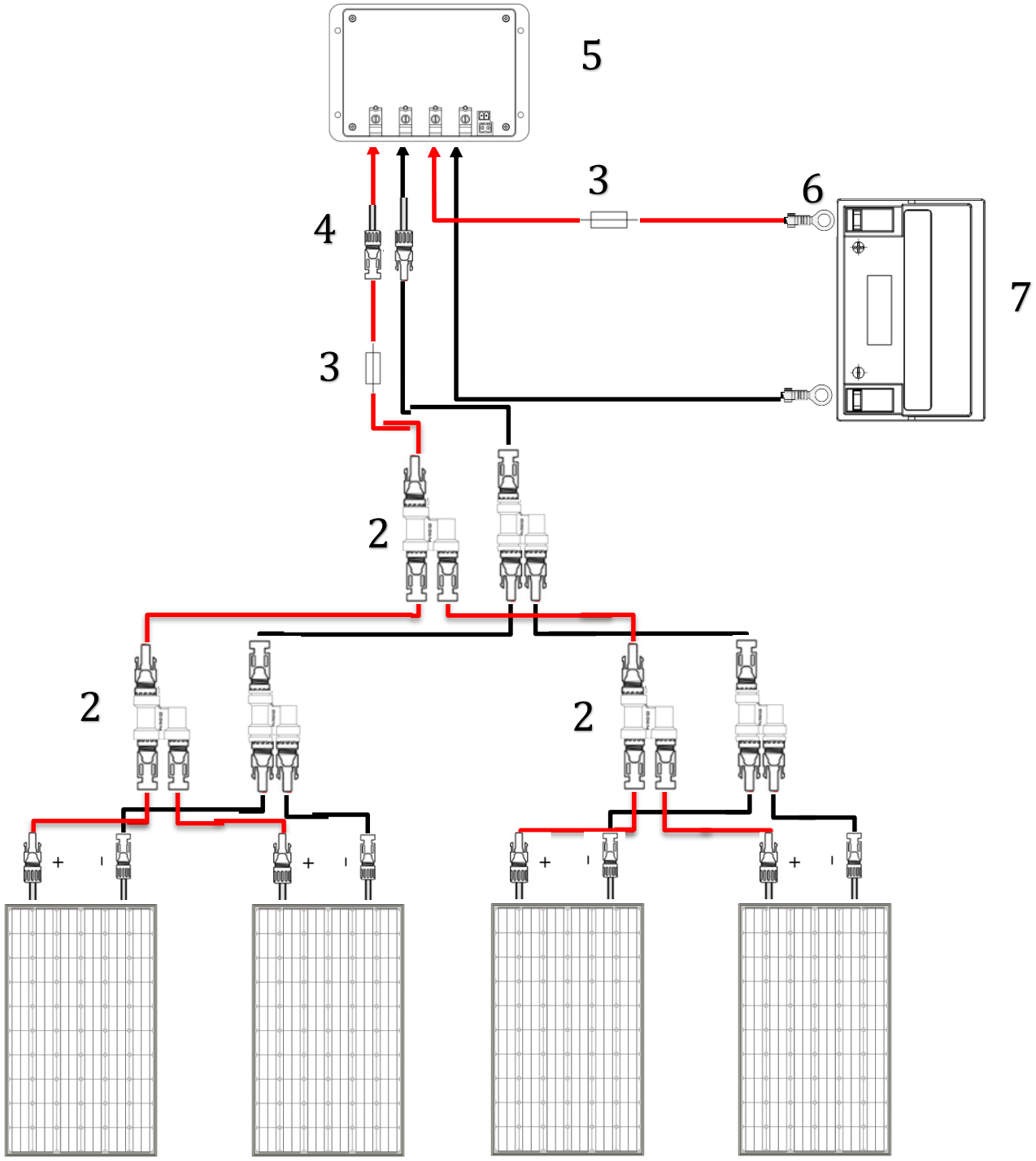

1. Solar Panels
2. MC4 Branch Connectors
3. Fuse
4. Adapter Kit
5. Charge Controller
6. Tray Cable
7. Battery Bank (12V)

Updated: July 20, 2015