# ZTNE 36 SERIES

## Electric performance par

| The electrical paramenters of standard test conditions | | | | | | | | |
|---|---|---|---|---|---|---|---|---|
| Name of component | | | ZT165 | | | | | |
| Component specification | | | ZT165P-36/1-17b | | | | | |
| Peak power | $P_{max}$ | W | 135 | 145 | 150 | 155 | 160 | 165 |
| Power tolerance | $\Delta P_{max}$ | W | ±3 | | | | | |
| Module efficiency | $\eta_m$ | % | 13.5 | 14.5 | 15.0 | 15.5 | 16.0 | 16.5 |
| Peak power voltage | $V_{mpp}$ | V | 16.90 | 17.90 | 18.40 | 18.90 | 19.40 | 19.90 |
| Peak power current | $I_{mpp}$ | A | 7.99 | 8.10 | 8.15 | 8.20 | 8.25 | 8.29 |
| Open circuit voltage | $V_{oc}$ | V | 22.10 | 22.70 | 23.10 | 23.40 | 23.70 | 24.00 |
| Short circuit current | $I_{sc}$ | A | 8.62 | 8.70 | 8.74 | 8.78 | 8.82 | 8.86 |

STC:Irradiance1000W/m², battery temperature25°C, atmospheric qualityAM1.5, according to EN60904-3

when the irradiance is 200W/m², the average efficiency loss by 5%, according to EN 60904-3.

## Temperature coefficient

| | | | |
|---|---|---|---|
| Nominal operating temperature | NOCT | °C | 46 +/- 2 |
| Temperature coefficients of ($P_{max}$) | γ | %/°C | -0.45 |
| Temperature coefficients of ($V_{oc}$) | $\beta_{Voc}$ | %/°C | -0.37 |
| Temperature coefficients of ($I_{sc}$) | $\alpha I_{sc}$ | %/°C | 0.06 |

## Operating conditions

| | |
|---|---|
| Maximum system voltage | 1000 $V_{DC}$ |
| Largest fuse rating | 15 A |
| Reverse current | The external voltage can not be greater than the open circuit voltage |
| Operating temperature | -45 ~ 85°C |
| Positive maximum static load(snow load and wind load) | 5400 Pa |
| Back maximum static load(wind load) | 2400 Pa |
| Hail test(hail diameter/impact speed) | 25mm / 23m/s |

## Structural meterials

| | |
|---|---|
| Glass(material/thickness) | Low iron tempered glass/3.2mm |
| Battery(quantity/kind/size) | 36/Polycrystalline/1/1 |
| Encapsulation(material) | EVA |
| Aluminum frame(material/color/color of anodic oxidation film) | Anodic oxidation aluminum/silver/transparency |

- Because of the continuous innovation, research and product upgrade , the content in the product specification is usually possible to change without prior notice . These content, there may be a slight deviation and its content is not guaranteed.
- These data are not for single component, they are also not a part of the sales, they are only used for different types of components.

## General features

| | |
|---|---|
| Size(length/breadth/height) | 1470mmx680mmx35mm |
| Weight | 11.96kg |

## Packing specification

| | |
|---|---|
| Number of component in each box | 4 |
| Packing size(length/breadth/height) | 1490mmx700mmx180mm |

Unit: mm

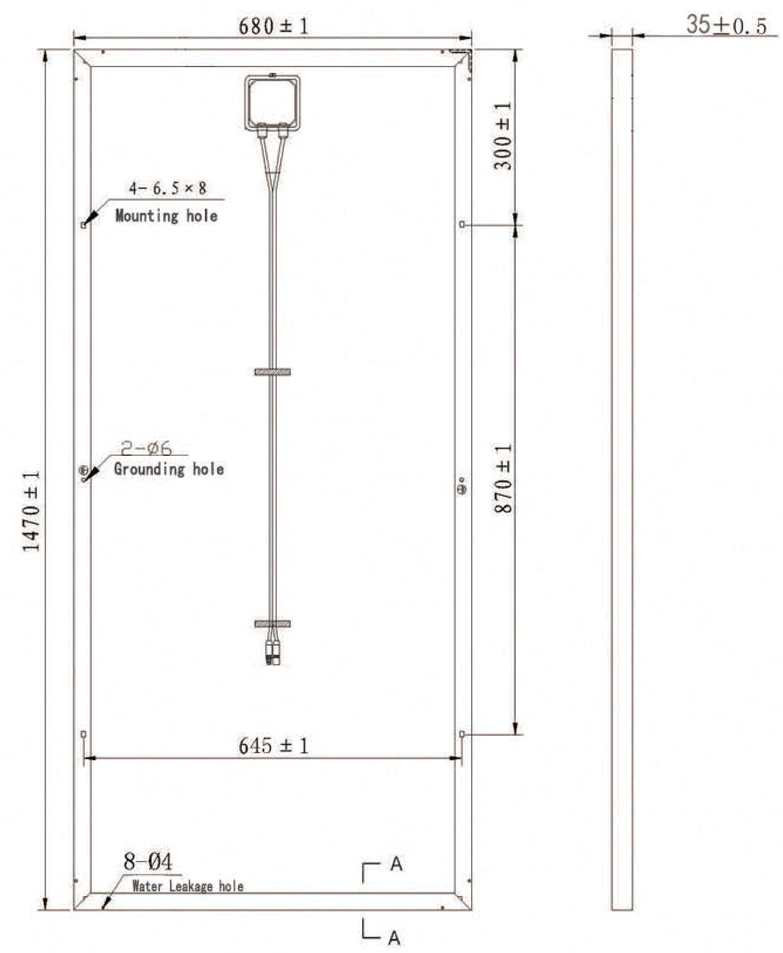


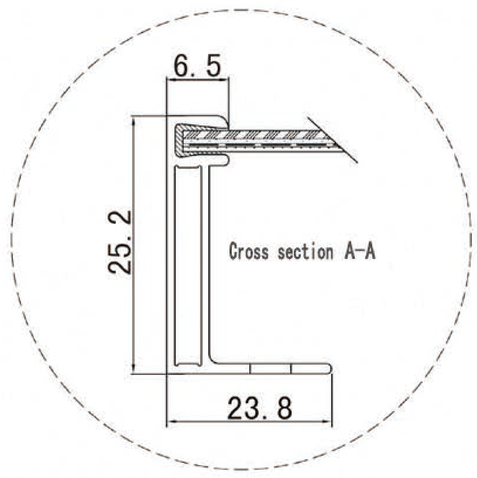


Warning:Before the operation to install and run zhongtai components, please first read carefully the installaton instruction.


BaoDing ZHONGTAI new energy technology co.,LTD
ADD:Hi-tech industrial park,North Yongsheng Street,Baoding,Hebei,China
E-mail:2755189147@qq.com
Internet:ZTSOLARKJ.COM
Tel:0312-5399693/5396622
Fax:0312-5399601


中泰 ZHONG TAI

SOLAR PRODUCT CERTIFICATION CQC CHINA QUALITY CERTIFICATION CENTRE

CE